CLARK
THE FORKLIFT

WSE16/16i

Lithium-Ion Stacker Truck
Lithium-Ion Stacker Truck with initial lift
1600 kg - Revision -

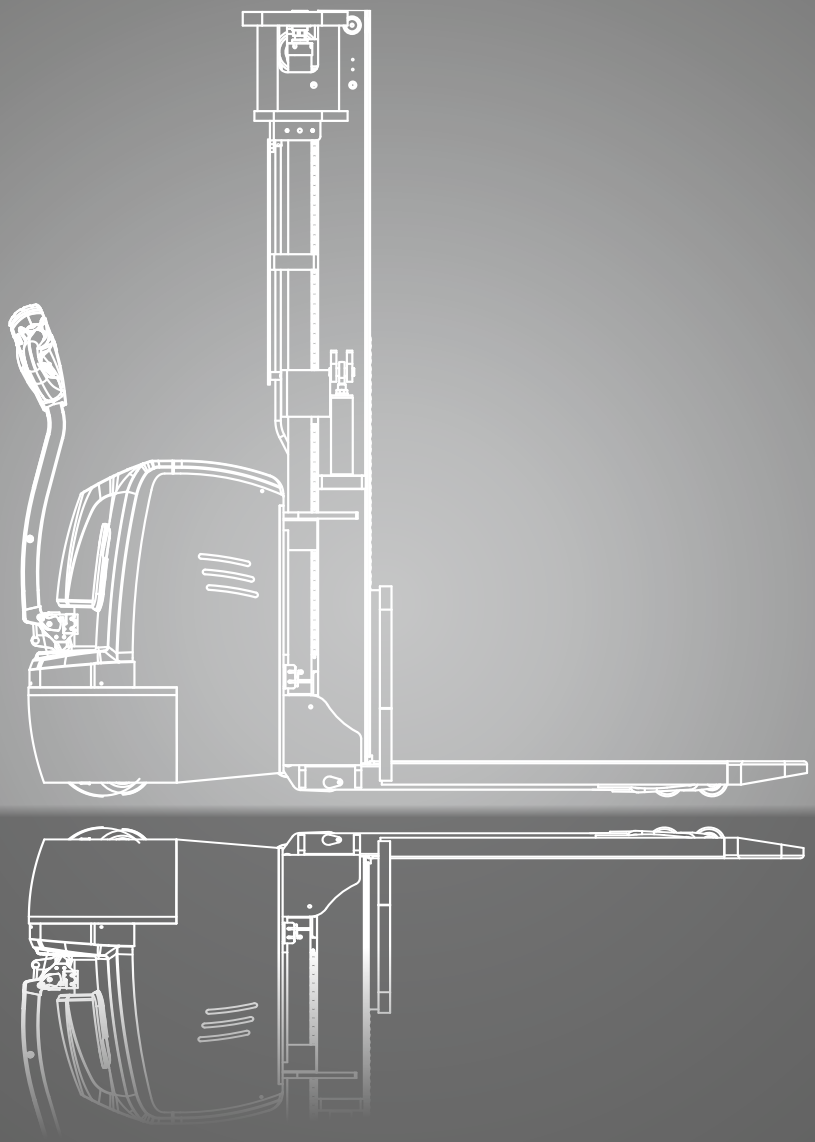

LI-ION

www.clarkmheu.com

DIMENSIONS

WSE16i

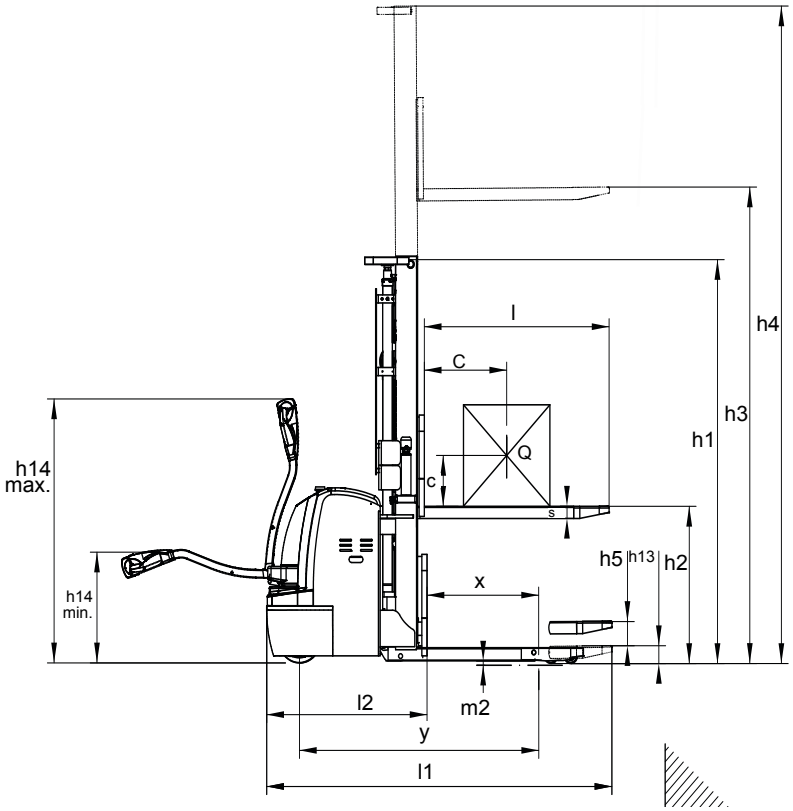

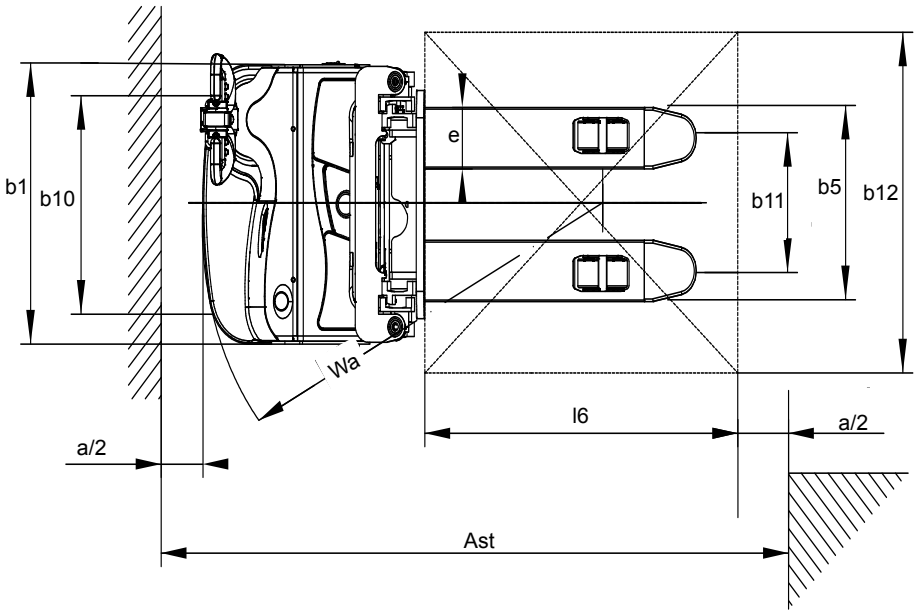

For corresponding data see specification chart.

SPECIFICATIONS

Product specification acc. to VDI 2198

	1.1	Manufacturer (Abbreviation)		CLARK	CLARK
Specifications	1.2	Manufacturer's designation		WSE16	WSE16i
	1.3	Drive unit		Electric-24V	Electric-24V
	1.4	Operator type stand on/driver seated		Pedestrian	Pedestrian
	1.5	Load capacity/rated load	Q (kg)	1600	1600
	1.6	Load centre distance	c (mm)	600	600
	1.8	Load distance, centre of drive axle to fork face	x (mm)	697	697
	1.9	Wheelbase	y (mm)	1383	1465
Weight	2.1	Service weight	kg	1380	1345
	2.2	Axle loading, laden front/rear	kg	1936 / 1037	1865 / 1070
	2.3	Axle loading, unladen front/rear	kg	897 / 473	882 / 448
Tyres, Chassis	3.1	Tyres		Polyurethane	Polyurethane
	3.2	Tyre size, front		Ø 250 x 70	Ø 250 x 70
	3.3	Tyre size, rear		Ø 80 x 84	Ø 80 x 84
	3.4	Additional wheel (dimensions)		Ø 150 x 60	Ø 150 x 60
	3.5	Wheels, number front/rear (x = drive wheels)		1x+1/4	1x+1/4
	3.6	Tread, front	b_{10} (mm)	520	520
	3.7	Tread, rear	b_{11} (mm)	405	390
Dimensions	4.2	Height of mast, lowered	h_1 (mm)	2145	2167
	4.3	Freelift	h_2 (mm)	1710	1710
	4.4	Lift height	h_3 (mm)	3300	3300
	4.5	max.height of mast, extended	h_4 (mm)	3770	3792
	4.6	Initial lift	h_5 (mm)	-	120
	4.9	Height drawbar in driving position min./max.	h_{14} (mm)	670/1200	670/1200
	4.15	Lowered fork height	h_{13} (mm)	90	90
	4.19	Overall length	l_1 (mm)	2028	2062
	4.20	Length to face of forks	l_2 (mm)	878	878
	4.21	Width	b_1(mm)	820	820
	4.22	Fork dimensions	s*e*l (mm)	60*180*1150	60*180*1150
	4.25	Width across forks min/max	b_5(mm)	570	570
	4.32	Ground clearance centre of wheelbase	m_2 (mm)	31	15 - 135
	4.34.1	Stacking aisle for pallets (l6 · b12) 1000 x 1200 across	Ast (mm)	2450	2530
	4.34.2	Stacking aisle for pallets (l6 · b12) 800 x 1200 along	Ast (mm)	2420	2500
	4.35	Turning radius	Wa (mm)	1575	1700
Performance	5.1	Travel speed laden/unladen	km/h	5.8 / 6.0	5.8 / 6.0
	5.2	Lift speed laden/unladen	m/s	0.18/0.30	0.18/0.30
	5.3	Lowering speed laden/unladen	m/s	0.45/0.37	0.45/0.37
	5.8	max. gradeability laden/unladen (S2 5 min.) *1	%	8/15	8/15
	5.10	Service brake		electro magnetic	electro magnetic
Drive line	6.1	Drive motor output (S2 60 Min.)	kW	1.5	1.5
	6.2	Lift motor output S3 15 %	kW	4.2 (AC)	4.2 (AC)
	6.4	Battery voltage, nominal capacity K5	V/Ah	24/230	24/230
Misc.	8.1	Steering design		AC	AC
	10.7	Sound level, driver's ear DIN/EN 12053	dB (A)	70	70

*1 At friction coefficient μ=0.6 with 1.6 km/h

All values shown are for standard lift truck with standard equipment. If the truck is supplied with options, values may change. The specifications apply under normal operating conditions. All values given may vary + 5 % and - 10 % due the motor and system tolerances and represent nominal values obtained under typical operating conditions. CLARK reserves the right to change products and specifications without prior notice.

DIMENSIONS

Upright table WSE16i

Upright type	Lift height (h3+h13)	Built height lowered (h1)	Height upright extended (h4)	Height upright extended (h4)	Freelift (h2)
			without load backrest	with load backrest	without load backrest
	mm	mm	mm	mm	mm
Standard	2500	1767	2992	3500	1310
	3000	2017	3492	4000	1560
	3300	2167	3792	4300	1710
	3500	2267	3992	4500	1810
Triplex	4000	1872	4522	5000	1390
	4500	2032	5002	5500	1570
	5000	2192	5482	6000	1750
	5600	2392	6082	6600	1950

Further Options

		WSE16	WSE16i
General	Low-maintenance AC drive motor	•	•
	Initial lift (WSE16i only)	-	•
	Proportional lift as standard	•	•
	Electric driving, lifting and lowering	•	•
	Battery discharge indicator	•	•
Battery and Charging Technology	Battery 24 V / 150 Ah Li-Ion charger 24 V / 50 A (external)	x	x
	Battery 24 V / 230 Ah Li-Ion charger 24 V / 100 A (external)	•	•
Safety and Operation	4-point support for high stability	•	•
	Activation via key switch	•	•
	Activation via PIN-Code	x	x
	Rubber drive wheel for improved traction	x	x
	Load backrest: 1000 mm / 1220 mm / 1500 mm	x	x
	Turtle mode function with raised tiller arm	•	•
	Safety screen (Perspex) on the mast	•	•
	Antistatic strap	x	x
	Holder for: documents, stretch film roll, scanner	x	x
	LED light (yellow)	x	x
	Warning signal (Buzzer)	x	x
	Blue Light	x	x
	Working lights	x	x

• = Standard equipment; x = Option

FEATURES & ADVANTAGES

WSE16/16i

Precise and powerful

- Standard proportional lift for smooth and precise lifting and lowering
- High lift speeds through powerful AC technology
- Robust mast and frame construction

Operation

- Standard masts with free lift: 2,500–3,500 mm
- Triplex masts with free lift: 4,000–5,600 mm
- Turtle mode for controlled manoeuvring in narrow areas
- WSE16i: initial lift for increased ground clearance and double pallet transport
- Fork length options from 1070 to 1600 mm

Operator-friendly

- TFT colour display with clear operating information
- Optional equipment: PIN code activation, A4 document holder, scanner holder, Blue Light, load backrest
- Ergonomically positioned controls

Maintenance-friendly

- CAN bus technology for simple diagnostics
- Water- and dust-protected drive motor
- Excellent access to electrical and hydraulic assemblies

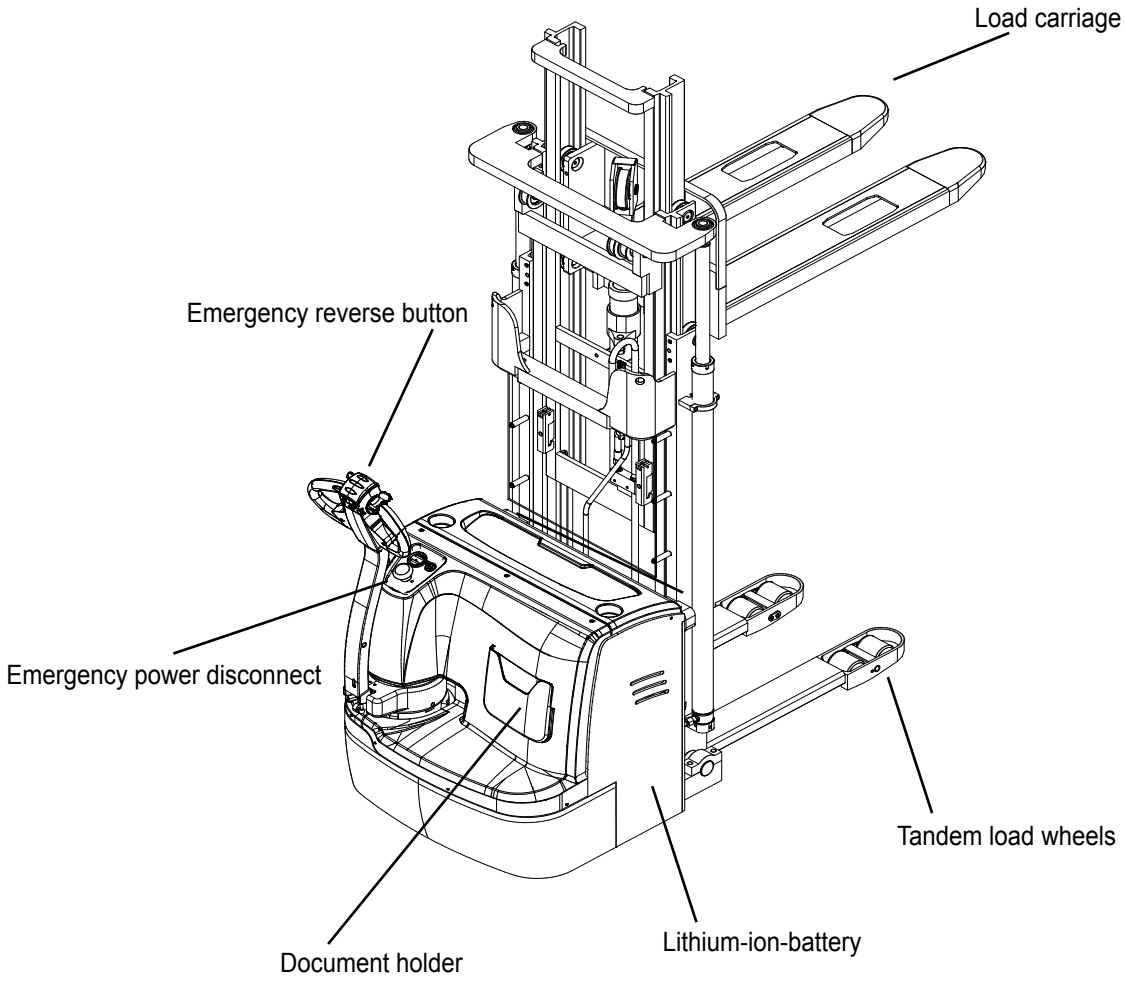

CLARK products, illustrations and specications are subject to change without notice. Performance may vary + 5 % and - 10 % due to motor and system effciency tolerance.

PRODUCT DESCRIPTION

WSE16/16i

Powerful and robust

The WSE16 and WSE16i models are robust electric pallet stackers for demanding industrial applications. They support fast work cycles, precise control and lift heights from 2,500 to 5,600 mm, covering a wide range of tasks in warehousing, production and logistics. Standard masts include free lift. Free lift enables the load to be lifted without changing the overall height of the truck, which is a clear advantage when working in areas with low clearance heights.

The WSE16 is the standard version without initial lift and is designed for classic storage and retrieval tasks. The WSE16i features an initial lift, providing increased ground clearance on ramps and uneven surfaces and enabling double pallet transport. This improves flexibility in the material flow.

Li-Ion Technology

The WSE16 series is available with modern lithium-ion batteries:

- 24 V / 150 Ah with external charger 24 V / 50 A (option)
- 24 V / 230 Ah with external charger 24 V / 100 A (std.)

Li-ion technology is maintenance-free and supports opportunity charging, delivering high availability for multi-shift operation. No ventilation zones or maintenance tasks such as water top-up are required.

Upright table WSE16

Upright type	Lift height (h3+h13)	Built height lowered (h1)	Height upright extended (h4)	Height upright extended (h4)	Freelift (h2)
			without load backrest	with load backrest	without load backrest
	mm	mm	mm	mm	mm
Standard	2500	1745	2970	3500	1310
	3000	1995	3470	4000	1560
	3300	2145	3770	4300	1710
	3500	2245	3970	4500	1810
Triplex	4000	1900	4530	5000	1390
	4500	2060	5030	5500	1570
	5000	2220	5510	6000	1750
	5600	2420	6110	6600	1950

CLARK Europe GmbH
Dr.-Alfred-Herrhausen-Allee 33
47228 Duisburg / Germany
Tel.: +49 (0)2065 499 13-0
Fax: +49 (0)2065 499 13-290
E-Mail: Info-europe@clarkmheu.com
www.clarkmheu.com

Dealer:

11/2026

Valid for Lot-no. WSE16: 13034
WSE16i: 13017